Hall Effect Thrusters

Eduardo Ahedo

EP2 uc3m

EPIC Lectures Series,
Madrid, October 26, 2017

1. Past and Present of HET

2. Principles of operation

The device in operation

anode & gas injector
(at back of chamber)

Cathode/neutralizer

electron beam

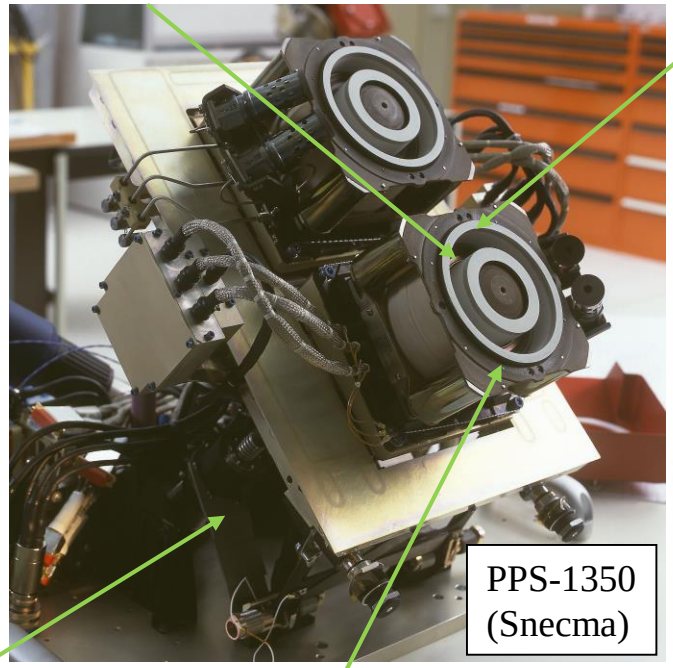

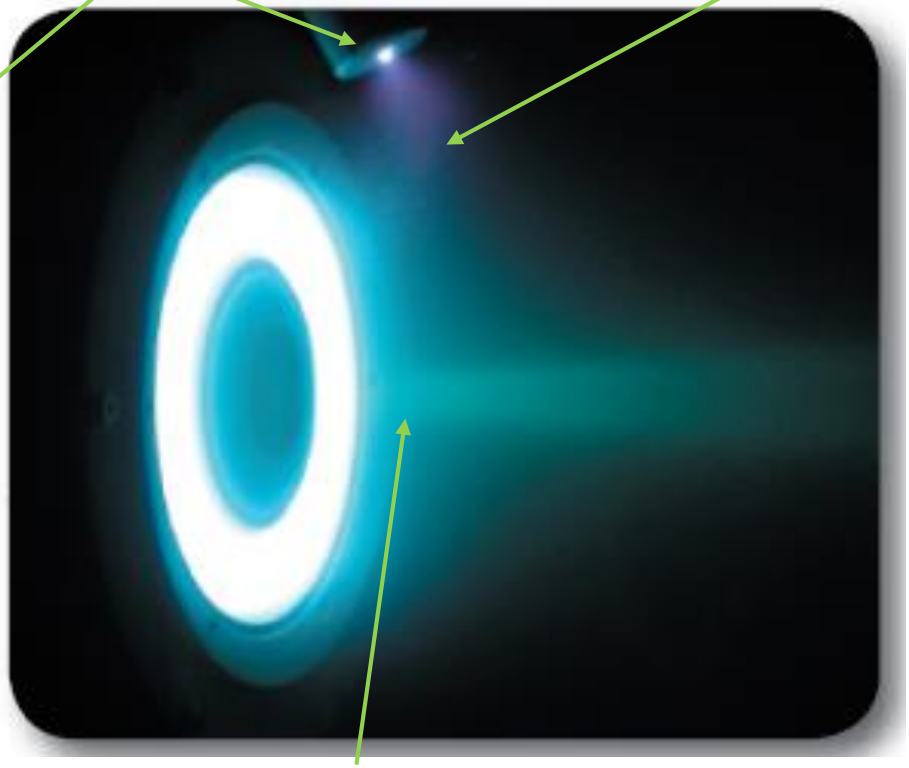

Thruster Module
Assembly

thruster

Xenon-ions beam

HET was invented 50 years ago

- HETs were invented in the early 1960s simultaneously in USA and USSR

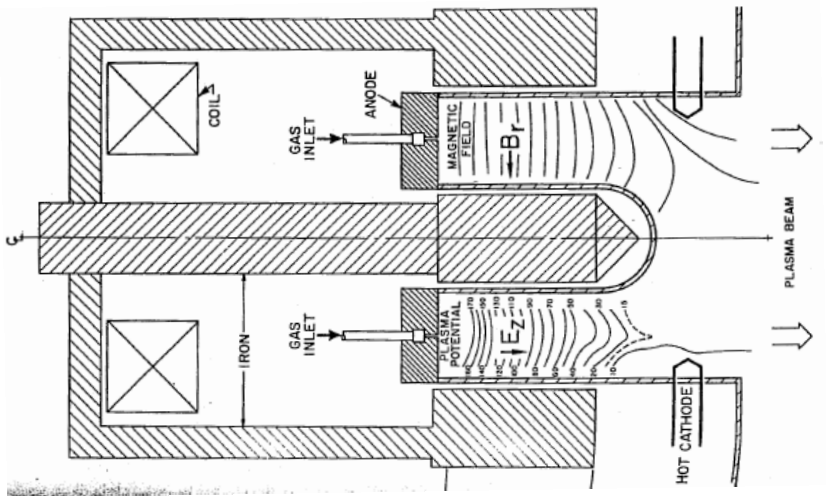

USA early prototye (Janes, 1966)

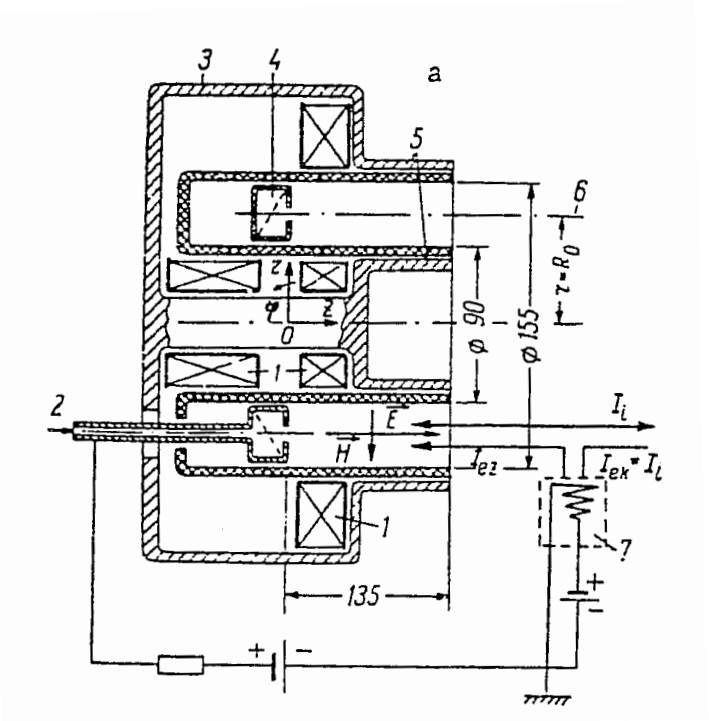

USSR early prototipe (Morozov, 1972)

A Soviet achievement

- In 1971, the USSR launched the first HET (SPT-50, 20 mN) in Meteor Spacecraft
- Around that time, USA abandoned research on HET (favoring research on the Gridded Ion Thruster, GIT)
- In the next two decades, USSR launched several missions using HET for satellite station keeping
- This activity was totally ignored by the rest of the world


SPT family (Fakel, RU)

In search of lost time

- USSR fall and subsequent diaspora of scientists unveiled the existence of that successful engine
- Joint ventures and intensive research programs on HET were then initiated in USA, Europe, and Japan.
- Ten years later, first HETs were tested in flight by USA and Europe

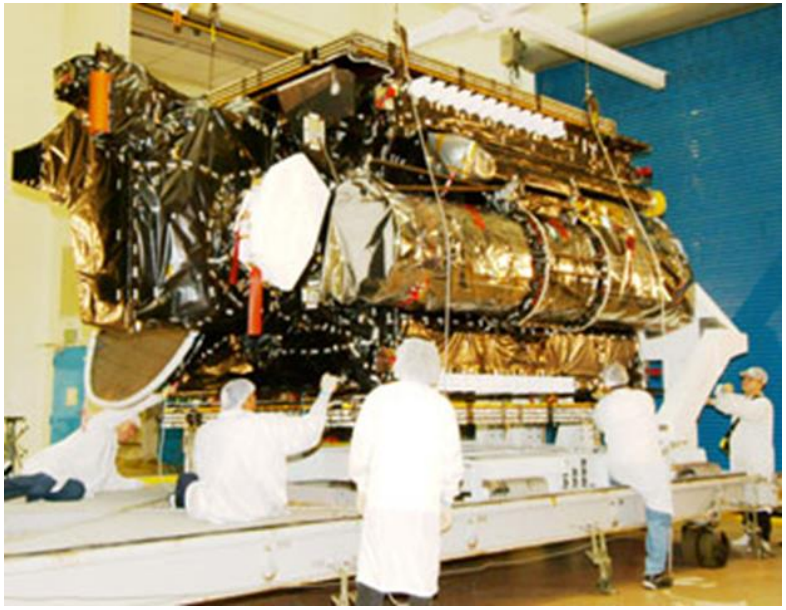

- First USA ComSat using HET was launched by SSLoral in 2004. Still in operation.
- Today, more than 50% of SSLoral satellites are equipped with HET

The SMART-1 mission

- This ESA satellite was the first mission ever using HET as primary space propulsion, achieving (a) Earth-orbit raising, (b) Earth-to-Moon transfer, (2) Moon-orbit operations
- The single PPS-1350 (1.3kW, 70mN) used just 82 kg of Xe during 10 months of firing for the 2-year mission

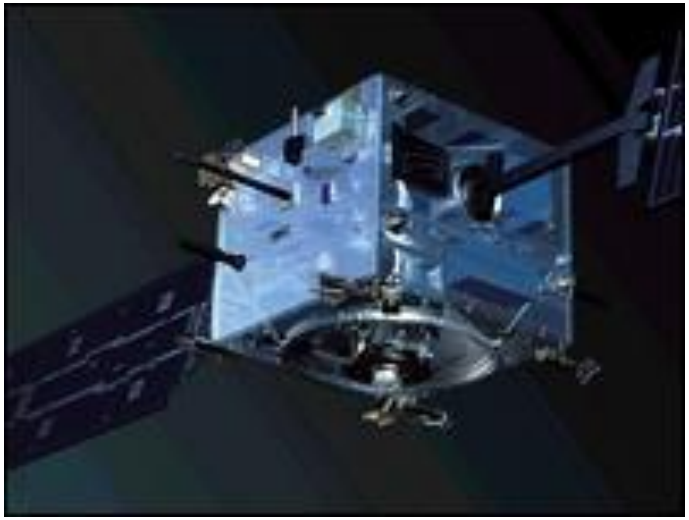

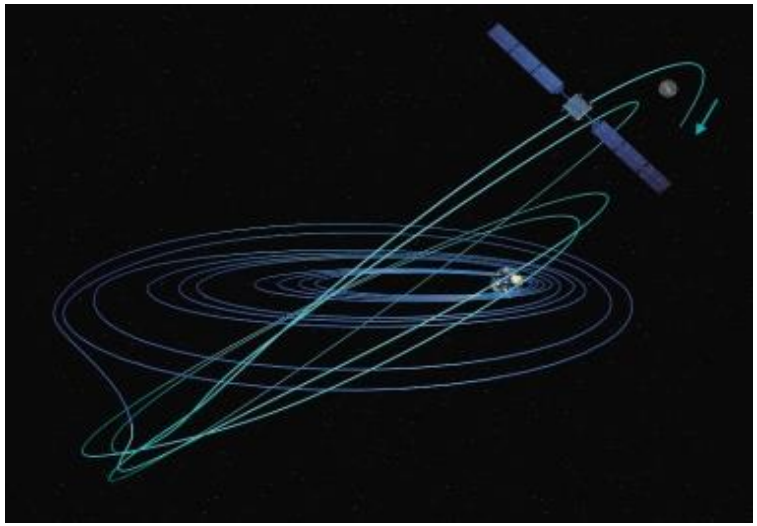

Rocket and mission magnitudes

- In-space propulsion is needed to change/provide spacecraft velocity and orientation: ΔV = sum of velocity changes needed
- Total impulse = $M_{spacecraft} \times \Delta V$

- Rocket propulsion is based on action/reaction forces
- Thrust F = action force of plasma jet on spacecraft
- Specific impulse: $$I_{sp} \approx \frac{M_{spacecraft} \times \Delta V}{M_{propellant}}$$

Note: Isp can be expressed in sec or in km/s; last one, less familiar but more convenient

- Onboard electric power P
- Propulsive efficiency,

$$\eta = \frac{P_{useful}}{P} \approx \frac{F \cdot I_{sp}}{2P} \approx 0.1 - 0.8$$

  - η measures the 'quality' of the thruster

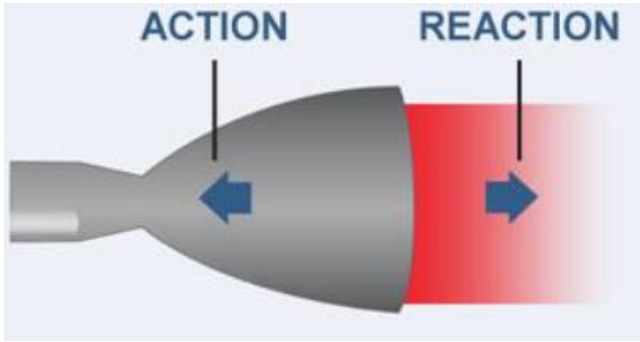

The propulsion dilemma

- Thrust vs I_{sp}: $(F/P) \times I_{sp} = 2\eta \approx 1$
- Higher I_{sp} (i.e. lower F/P) implies:
  - Lower acceleration ($\propto F/P$)
  - Longer thruster firing($\propto P/F$)
  - Lower propellant mass ($\propto 1/I_{sp}$)
    - $\rightarrow$ Lower launching cost
- Minimization of launching cost requires to consider, in addition,

  (1) weight of the thruster system,

  (2) constraints on firing duration

  $\Rightarrow$ There is an optimal I_{sp}

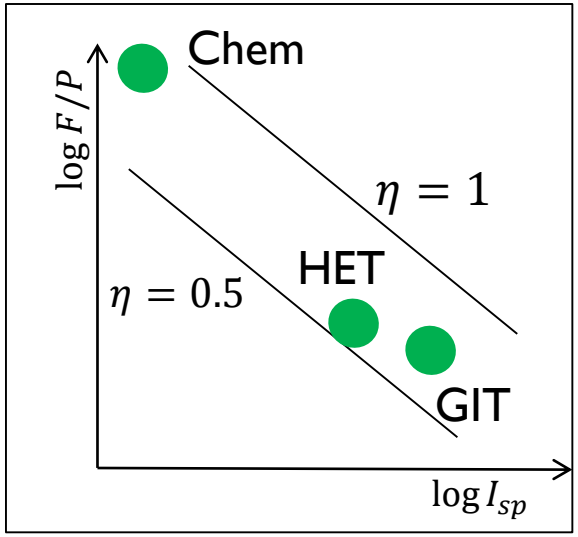

Chemical (Hydrazine)	~2 km/s=200s
Hall Effect Thruster	~20km/s=2000s
Gridded Ion thruster	~30km/s=3000s

E. Ahedo, Plasmas for Space Propulsion, Plasma Phys Cont. Fusion 53, 124037 (2011)

Incrementing EP responsibilities

- New: dual propulsion mission for GEO satellites
  - (1) GTO-GEO orbit raising, at maximum thrust
  - (2) Station Keeping, at maximum Isp
- Qualification of dual-mode thruster is very challenging

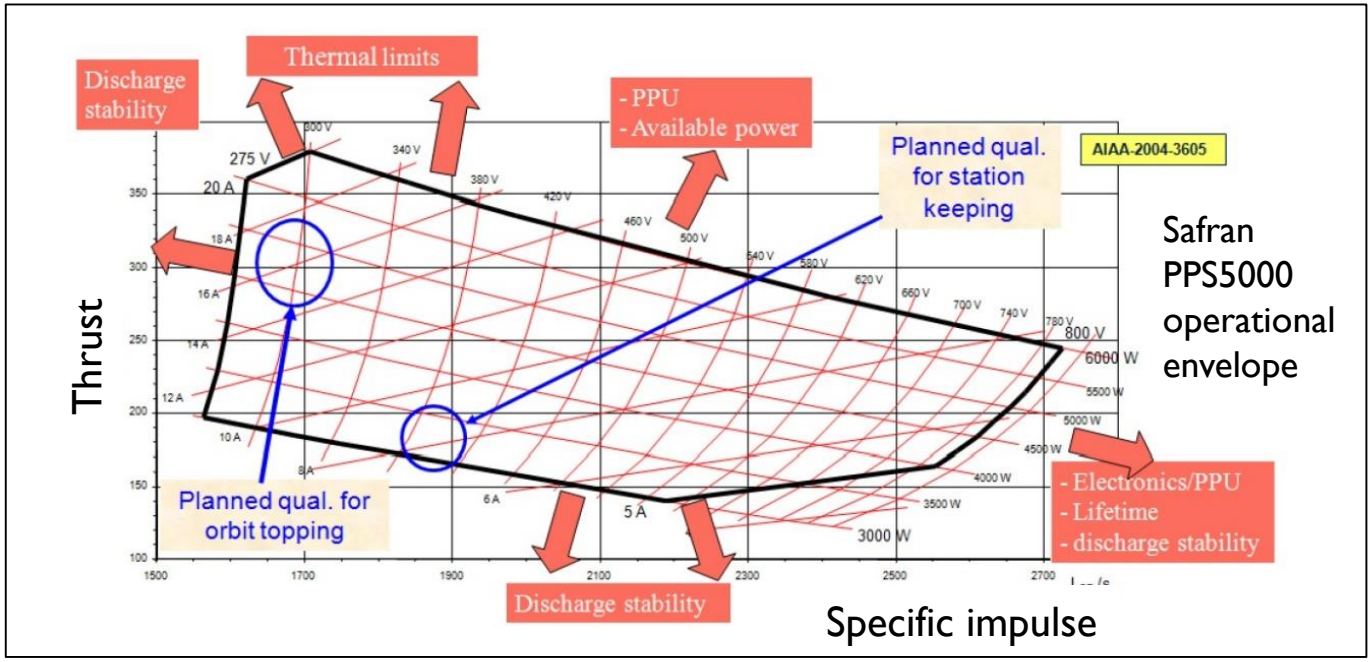

The all-electric spacecraft

- Conceived by Boeing in 2012 is being the new trend
- Several platforms are being designed and flown
- Strong competition between GIT and HET
  - HET is better positioned (currently)

All-electric satellites halfway to becoming half of all satellites

by Caleb Henry — August 22, 2017

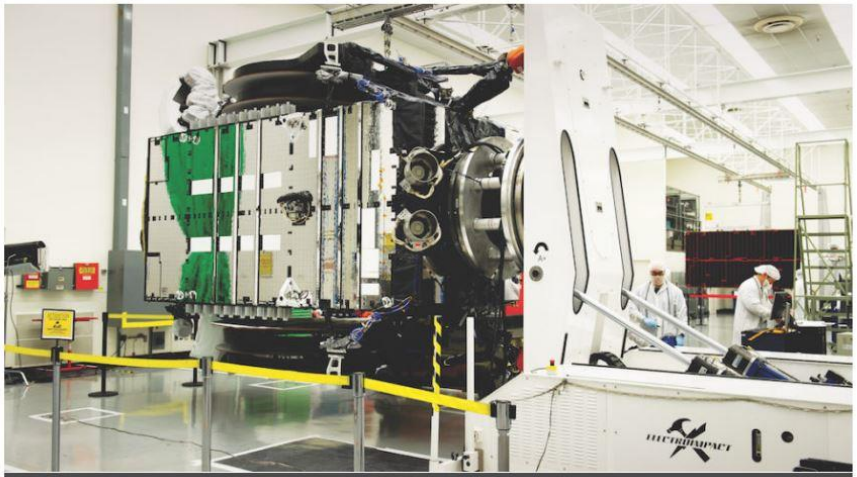

SES-15 all-electric satellite. Credit: ArianeGroup

This article originally appeared in the July 3, 2017 issue of SpaceNews magazine.

ABS All-electric Satellite Arrives Early at Operating Orbit

by Peter B. de Selding — September 10, 2015

ABS-3A is the world's first all-electric commercial telecommunications spacecraft. Credit: Boeing artist's concept

11 OCTOBER 2017 • SPACE

Airbus-built full electric EUTELSAT 172B satellite reaches geostationary orbit in record time

‘Mid-class’ HET vs the ‘up-class’ GIT

- GIT is the jewel of the large EP family. It has
  - the highest efficiency
  - the longest duration
  - the highest specific impulse
  - the lowest beam divergence
  - a successful flight history (HET too)
- But GIT (compared to HET) is
  - much more complex to manage electrically
  - heavier → which can spoil the $M_{propellant}$ saving
  - more expensive
  - less flexible operationally?
- HET is dominating space market…and even Mars race

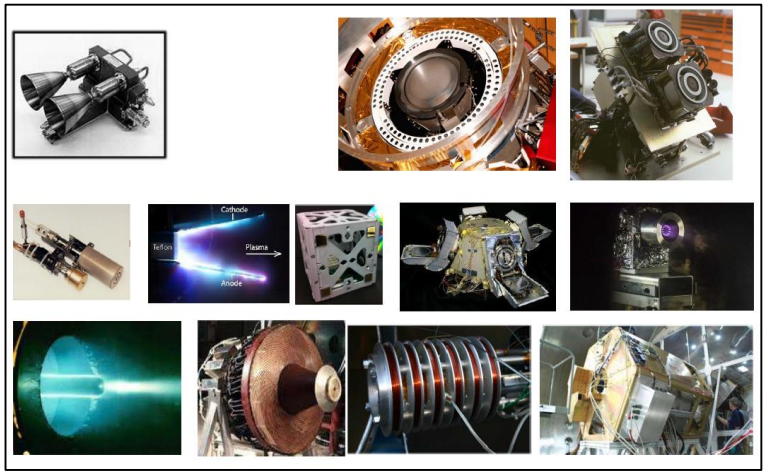

EP family portrait (incomplete)

High-power HET for exploration

Indeed a HET !

Space.com > Tech

Ion Thruster Prototype Breaks Records in Tests, Could Send Humans to Mars

By Tereza Pultarova, Space.com Contributor | October 13, 2017 07:00am ET

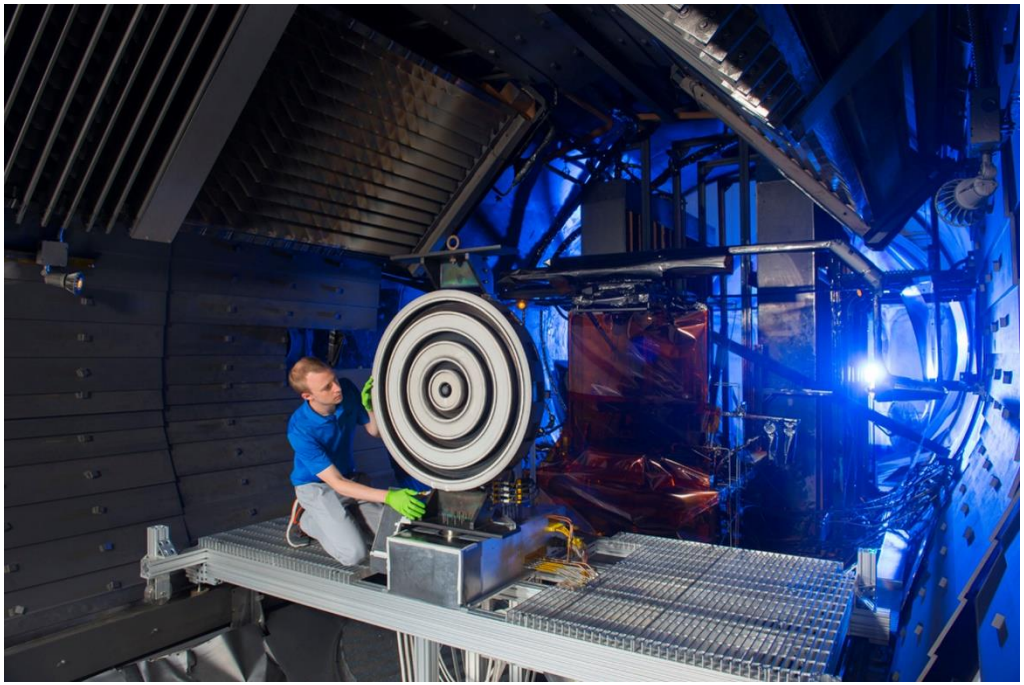

NASA X3

Nested HET, 102kW,

5.4 N, 2000s-Isp,

Low-power HET for Near-Earth missions

- Low-to-mid power HET are being considered for new applications:
  - Constellations of 100s satellites
  - Galileo GPS 2nd generation
  - Earth Observation
- Issue: HET loses efficiency below ~100W

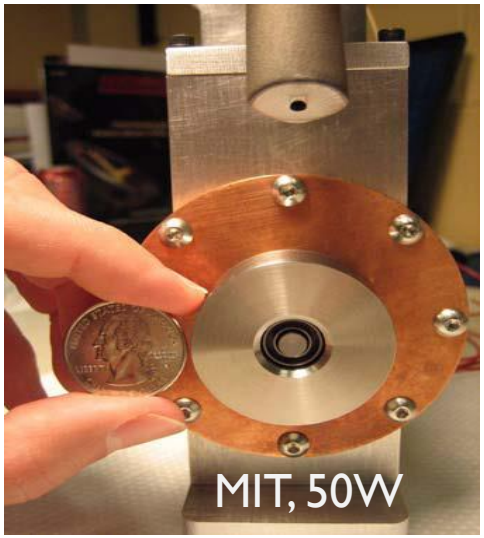

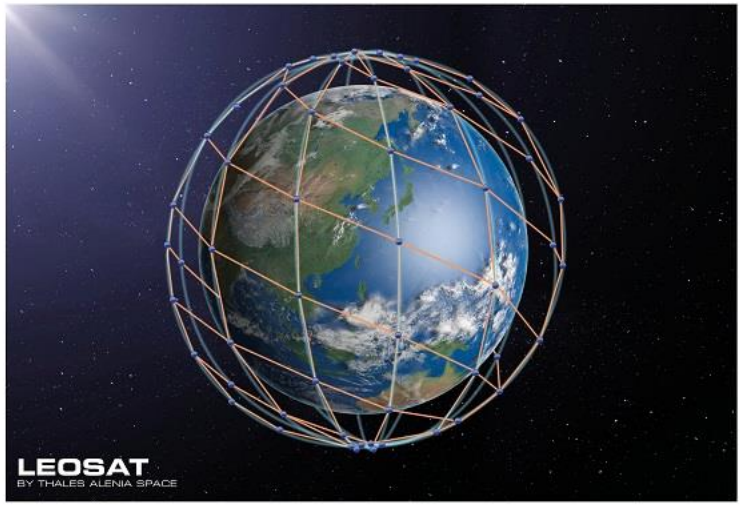

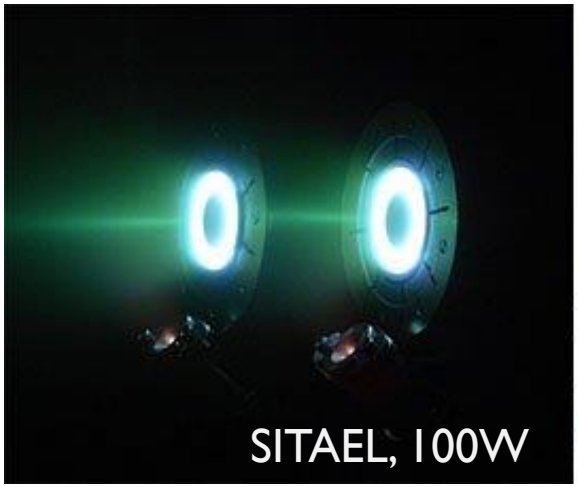

1. Past and Present of HET

2. Principles of operation

Production and acceleration processes

- In GIT: (1) production, (2) acceleration, and (3) beam neutralization regions are very clearly separated
- In a HET, the same 3 regions exist but they are partially overlapped
  - These coupled processes must be considered together

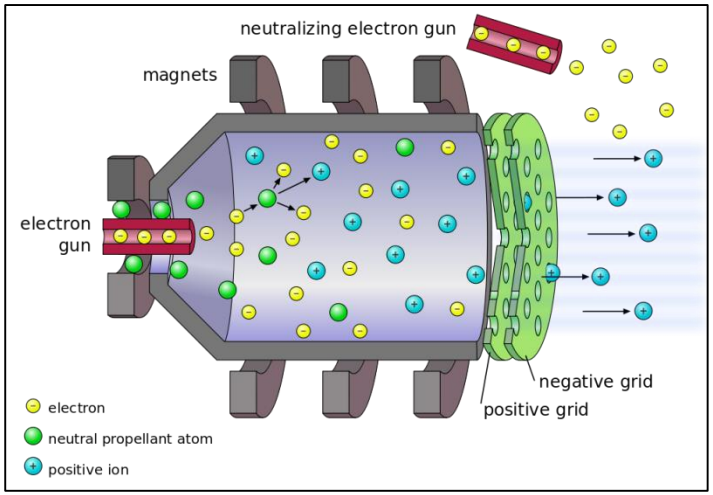

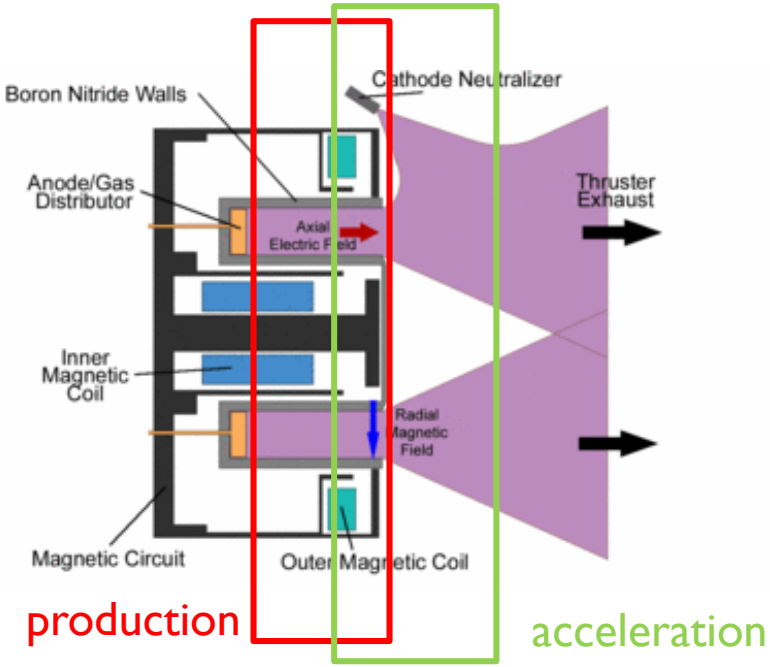

HET operation basics

- An electric source set discharge voltage (~300-500V) between (a) anode and (b) electron-emitting cathode
- Cathode-emitted electron current splits itself into outward-bound and inward-bound electron beams
- Inward-bound electrons ionize neutral gas
  - Born ions are accelerated outwards by electric field, creating an ion beam
  - Born electrons move inwards and are collected by anode
- Outward-bound electrons current neutralizes ion beam current.

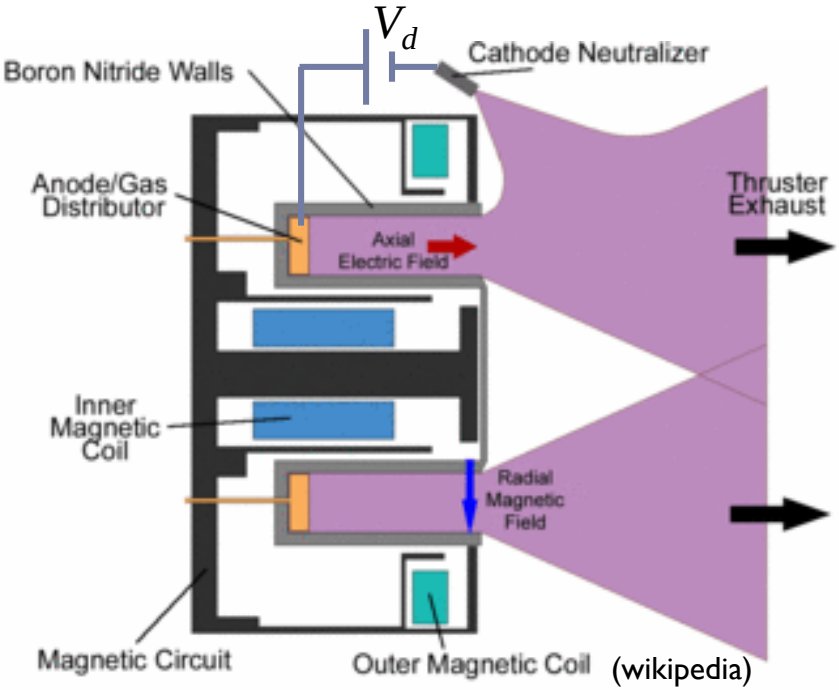

(wikipedia)

HET operation basics

- How the plasma manages by itself to split the emitted electron current, such that $I_{electron-out} = I_{ion}$?
  - Net electric current is not zero $\Rightarrow$ thruster gets charged electrically $\Rightarrow$ surrounding electric potential field is modified, in order to restore zero electric current
- How do we create a radial magnetic field in the annular chamber ?
  - With coils and ferromagnetic material
  - Some HET use permanent magnets

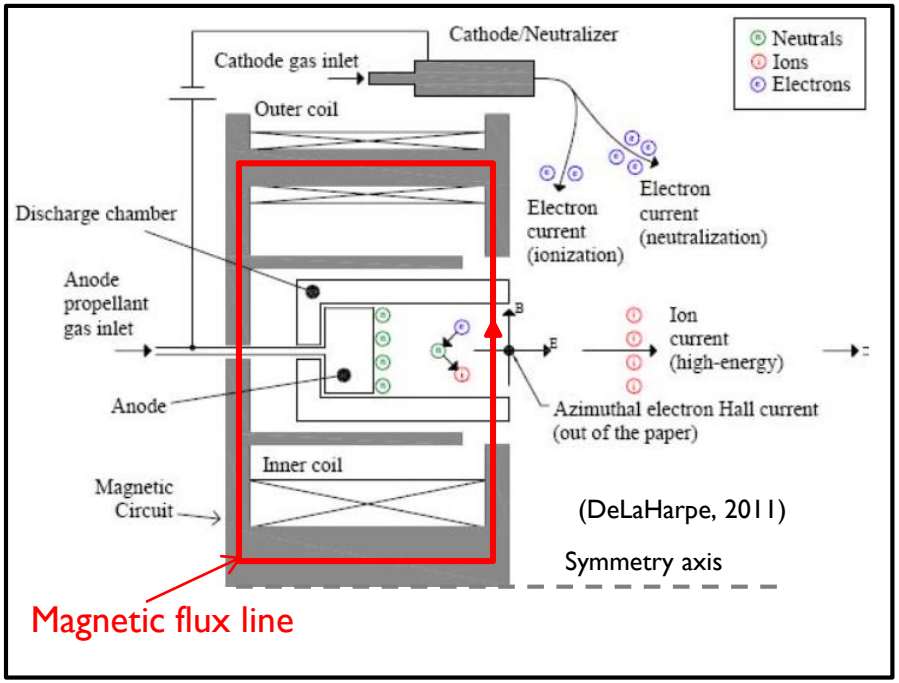

Why a radial magnetic field is needed

- Without B-field: free electron acceleration by E-field
  - $t_{residence}$ (10^{-2} μs) << $t_{ionization}$ (1μs) ⇒ no gas ionization
- With applied B-field: composed electron motion
  1. Electron gyromotion around B line → magnetic confinement
  2. ExB <u>azimuthal</u> drift → main role of E-field on electrons
  3. Collisional <u>axial</u> drift →

     the way to advance axially
  4. <u>Radial</u> bouncing between walls

     → electrostatic confinement
  - $t_{residence}$ (10μs) >> $t_{ionization}$(1μs)

    ⇒ plasma is created!

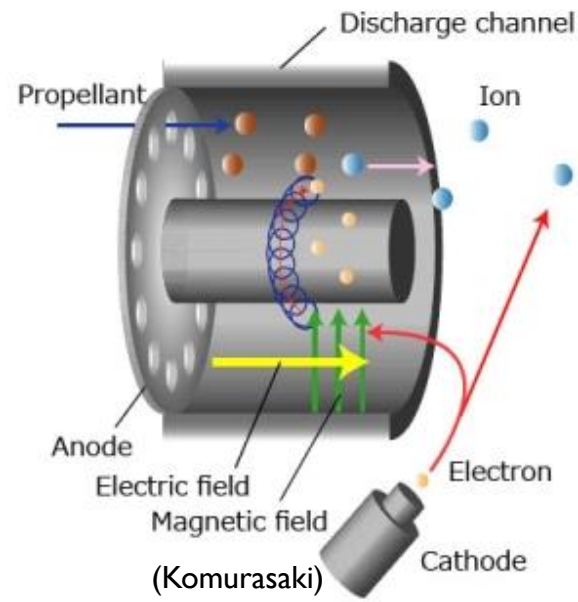

(Komurasaki)

Why ions are not magnetized?

- Applied magnetic field is 200-400 gauss
  - Earth's magnetic field ~ 0.5 gauss
  - Tokamak magnetic field ~ 10000 gauss =1tesla
- Ions are practically unaffected by magnetic field
  - This is done on purpose !
  - They move axially practically free, accelerated by E-field
- How can it be?
  - The effect of the B-field is proportional to $\sqrt{m_{particle}}$
  - $\frac{m_{xenon}}{m_{electron}} \simeq 240500$
  - A magnetic field 100-300 times larger would be needed to magnetize ions (as in a tokamak)

How thrust is achieved in HET

- The action-reaction force between HET and plasma beam is <u>magnetic</u>
- The principle is the same of the repelling forces between two counterstreaming rectilinear currents
- Here, these currents form loops
  - In HET: those forming the coils
  - In beam: the continuous supply of azimuthal electron currents

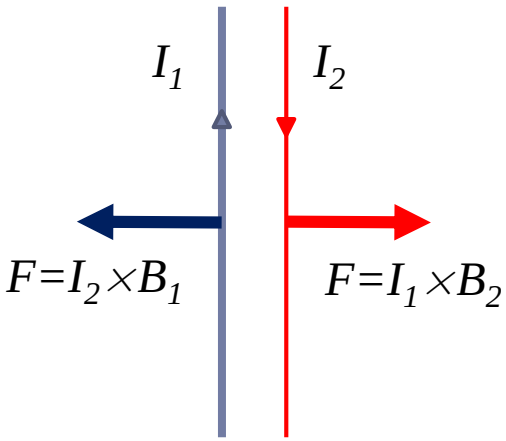

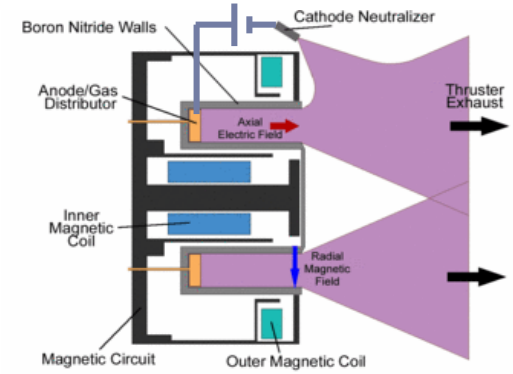

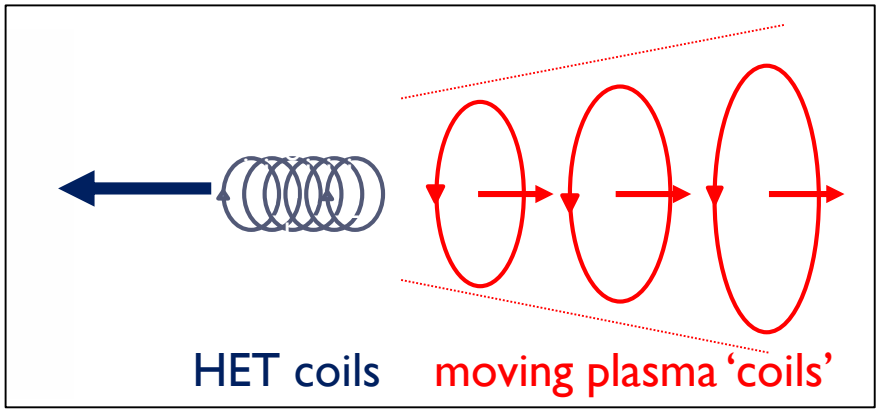

The roles of self-adjusted electric field

- Electric field fulfills Gauss law:

$$\epsilon_0 \mathrm{div}\vec{E} = \rho_{elec} = \rho_i + \rho_e$$

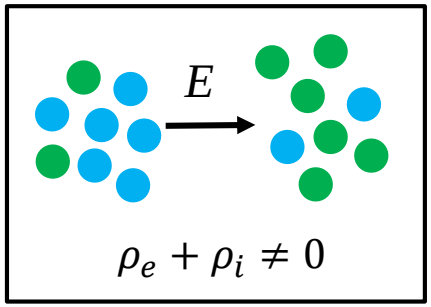

- $\vec{E}$ acts in order to minimize ρ_{elec}, resulting in
  - Near equal (but opposite) electric charges: $\rho_e \simeq -\rho_i$
  - Near equal (but opposite) electric fields: $\rho_e\vec{E} \simeq -\rho_i\vec{E}$
  - Negligible net effect of $\vec{E}$ on momentum of plasma as a whole (i.e. electron/ion pairs): $(\rho_e + \rho_i)\vec{E} \simeq 0$
- $\vec{E}$ is the agent helping the electron-to-ion energy transfer

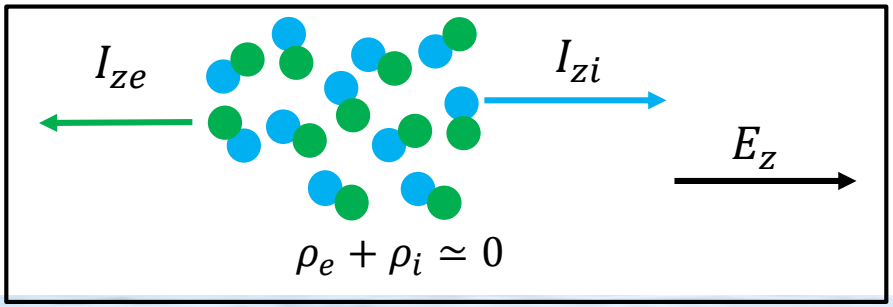

How thrust is related to ion momentum

- E×B drift expresses Lorentz force equilibrium (per electron):

$$0 \simeq -eE_z + ev_{\theta e}\, B_r$$

- Momentum gain (per ion): $m_i \frac{Dv_{zi}}{Dt} \simeq eE_z$

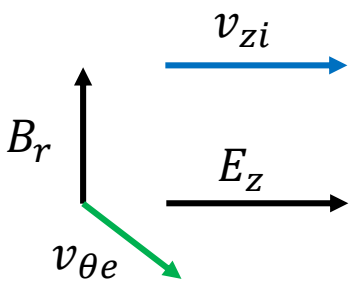

- Adding for an ion/electron pair

$$m_i \frac{Dv_{zi}}{Dt} \simeq ev_{\theta e}\, B_r$$

- Reaction force = Magnetic force on electrons = Electric force on electrons = Electric force on ions = Momentum gain of ions

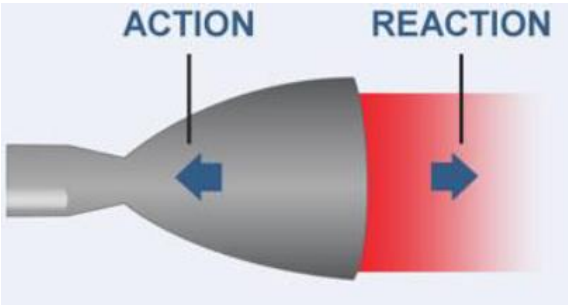

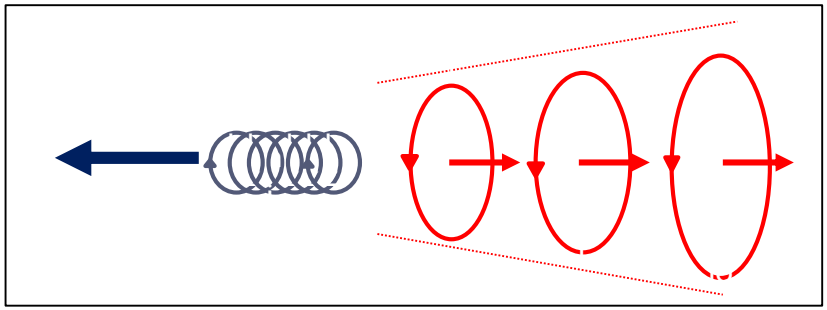

Why HET is less efficient & durable than GIT

- **Penalty in efficiency** comes from

1. Larger plume divergence, due to
   - Lower discharge voltage
   - More spread out plasma production

Difficult to improve.

Plume-spacecraft interaction is a major concern

2. Larger particle & energy losses at chamber walls, due to
   - Hotter plasma in HET
   - No magnetic shielding at lateral walls

Consequence of this:

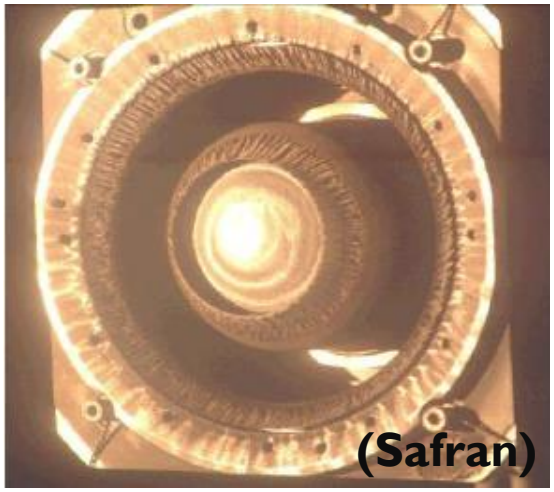

- **Penalty in lifetime** due to
  - Wall sputtering

New HET designs look for magnetic shielding of walls

Novel HET designs

- More complex magnetic topologies, try to simultaneously

a) limit axial electron transport

b) shield chamber walls magnetically [i.e. limit radial transport]

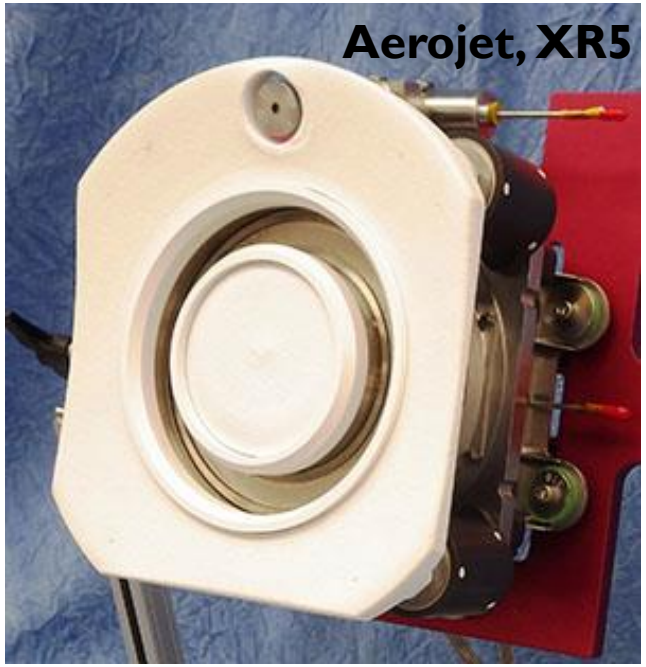

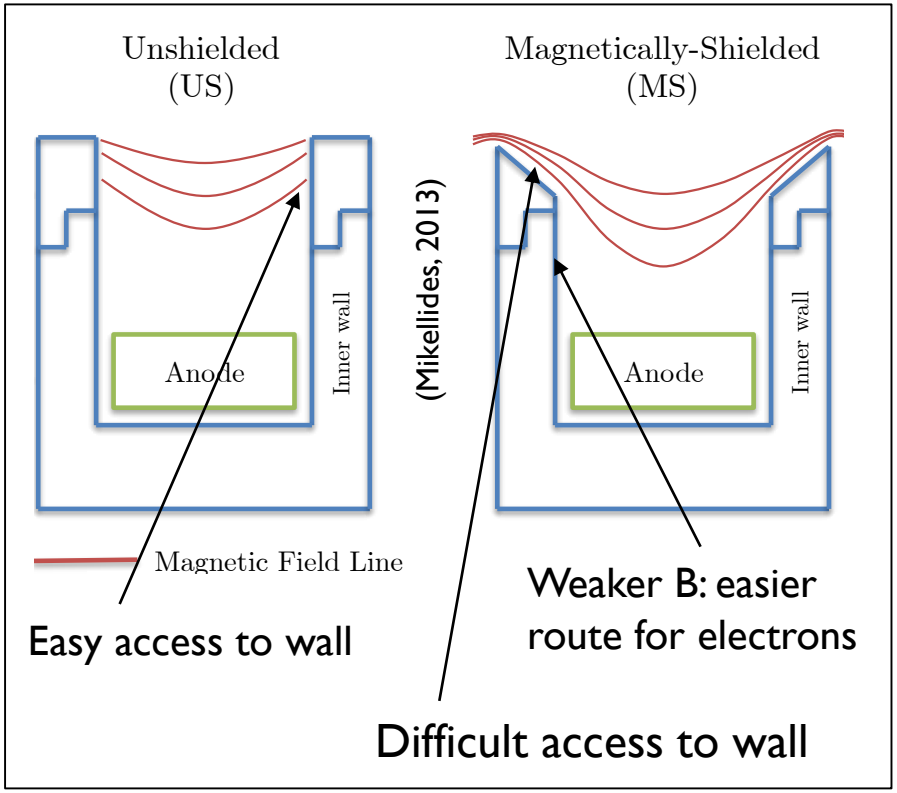

Are HET physics well-enough understood?

- **NO!** Central phenomena affecting HET performances are insufficiently understood
- This precludes development of predictive numerical codes
- These codes are highly needed to reduce costs of design, development, and qualification of new long-life (3-4 years), multi-mode HETs
- A large worldwide research effort, covering from theory to testing, is under way to achieve these predictive tools

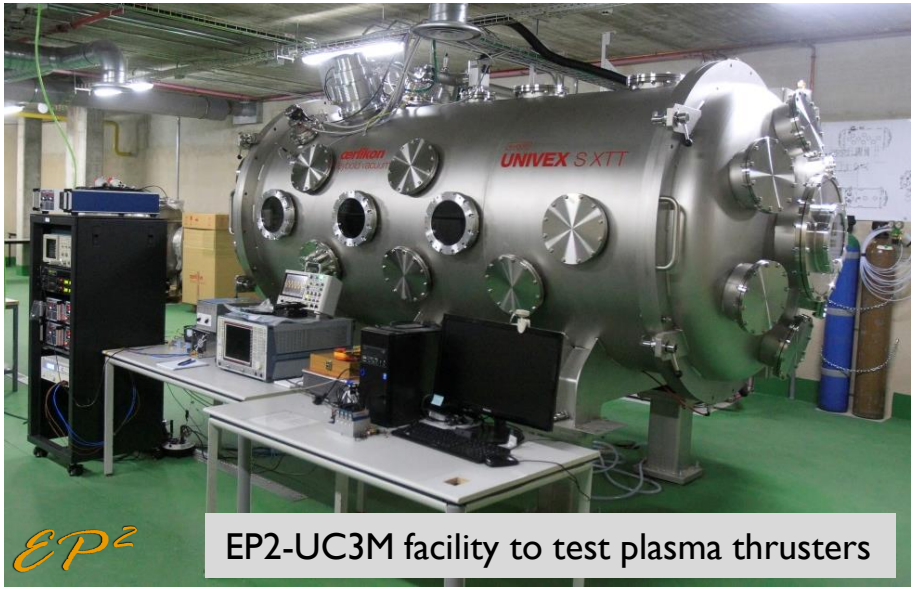

EP2-UC3M facility to test plasma thrusters

Thank you for your attention

$\mathcal{E}P^2$ uc3m

is actively researching, within H2020 CHEOPS project, in HET physics modeling & development of reliable simulation codes